CONTRACT FOR:

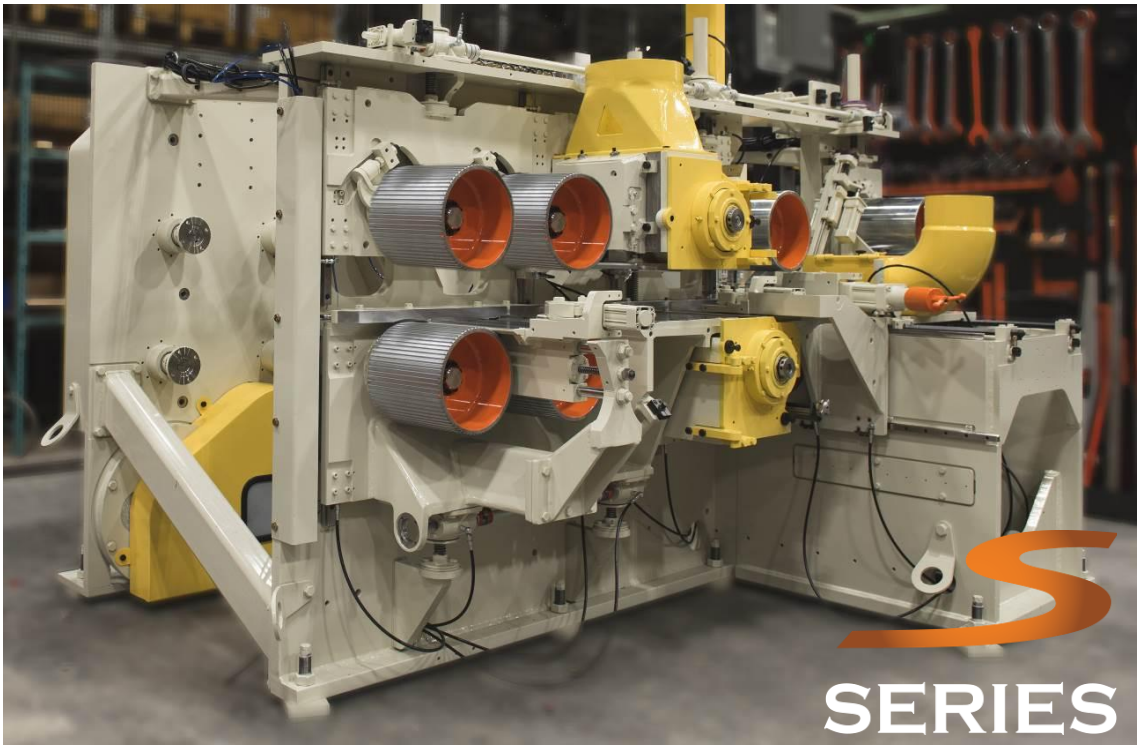

Note: Picture may be different from description

GILBERT S-SERIES PLANER

Presented to:

Roger Timms

Acora / Quality & Innovation
Eden Office \ 11 Government Road, Eden NSW 2551 \
Tel: +61 (0)2 6496 1222 \ www.acora.com.au

For:
South Pine
Nelson, New Zealand

September 4, 2025

1840, blvd. Marcotte,
Roberval, Québec, Canada
G8H 2P2
T 418.275-5041
www.gilbert-tech.com

September 4, 2025

Roger Timms
Acora

Contract according to QV02242 rev 7

Contract for a GILBERT S-Series Planer Project

Dear Mr. Timms,

Following your request for a quotation regarding a **Gilbert S-Series Planer Project line,** with respect to your specifications, we are pleased to send the enclosed information.

We would be pleased to manufacture a Planer operating **up to 300 meters per minute** for production range of **35 to 45 mm**. thickness, **70 to 300 mm** width and **from 2400 to 6000 mm** length.

DESCRIPTION OF GILBERT S-SERIES PLANER

Frame

- Sturdy modular steel frame, allows easier maintenance, reduces time of adjustment & set-up, and gives full access to lumber. Frame is stress relief to ensure optimal operation.

Feed Mechanism

- Total of eight (8) feed rolls, 225 mm. diameter.
- Four (4) grooved entry rolls, chromed, 225 mm. diameter.
- Four (4) polished centre and outfeed rolls, chromed, 225 mm. diameter, to accommodate shorter lengths.
- All eight (8) rolls are assembled cantilever for quick access.
- The eight (8) feed rolls are motorized by **two (2) 30 kW** electric motors.

Tables (feed plates)

- Entry feed plate fixed on frame with ½ in. manual adjustment.
- Central adjustable feed plate integrated to frame.
- Exit feed plate.

Alignment Rulers (guide bar)

- Entry ruler and central rulers, zero line attached to frame, with manual adjustment of alignment and rigid mechanical locks.
- All rulers are chromed.

Foot-Pressers (chip breakers)

- Foot-pressers at entry.
- Pressure plat at exit.
- Displacement, adjustment and pressure are controlled by pneumatic cylinders, for quick release in case of jamming.
- All foot-pressers are machined.

Lateral Presser Roll

- Lateral presser roll manufactured from solid steel with adjustment on pacific bearings and release on pneumatic cylinder.
- Lumber is always pressed against the guide bar, therefore does not rebound.

Cutterheads

- One (1) top cutterhead, one (1) bottom cutterhead, one (1) right side head, one (1) left side head.
- Each mounted on high rotation bearing assembly (cutterheads not included in planer price).
- Each high rotation bearing assembly is driven by heavy-duty electric motor at 3600 RPM. Motors will be installed direct drive. VFDs can be installed on cutterhead motors and run up to 4200 rpm with Weg.

300 meters per minute

- **55 kW** on top cutter head
- **30 kW** on right side head

55 kW on bottom cutter head
30 kW on left side head

Price for Gilbert S-Series Planer (4 spindles):	**$571,144.00 CAD**

Option for S-Series PLUS Planer – CAN RUN UP TO 550 MPM IN THE FUTURE
Includes:

- Bigger shafts on cutterheads, with upgrade on case bearings.
- High pressure automatic lubrication (if auto option is not taken, manual lubrication is included)
- Independent module for top head including servomotor
- Tungsten cladding coating (rather than chrome) on wear parts and pineapples – longest lasting coating on the market
- HD design top head and side head chipbreakers
- HD Holdover rolls
- **Option for bigger motors (Bigger motors could be installed to run faster. Not included in pricing but available. This planer could run up to 550 mpm)**
- **Cooling system available**

PLUS OPTIONS:	**$57,061.00 CAD**
Bigger motor options:	
Two bigger motors for top and bottom heads, 75 KW:	$20,120.00 CAD
Two bigger side head motors 37 KW:	$14,705.00 CAD

GILBERT PROFILE/SPLITTING MODULE

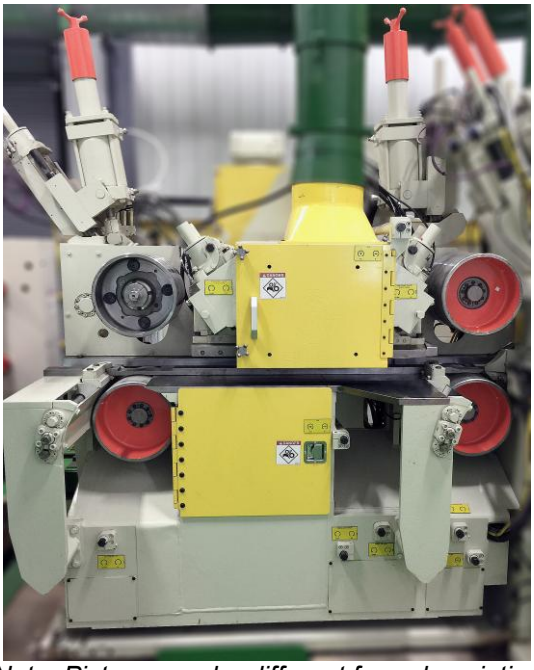

Note: Picture may be different from description

Description

- Horizontal profile/splitting module: **two (2) 37 kW** electric motors.
- Sturdy modular steel frame, 50 mm minimum thickness, allows easier maintenance, reduces the time of adjustment and set-up and gives full access to lumber.
- Frame is stress relief to ensure optimal operation.

Cutterheads

- Similar cutter heads as the planer can be used (cutterheads are not included in the profile/splitting module price).
- One (1) bottom cutterhead can be mounted on high rotation motor.
- One (1) top cutterhead can be mounted on high rotation motor.
- The cutterhead can be locked in place hydraulically with Hydro Grip system and mounted with non slip security collar.
- All profile knife models, saws and special heads can be mounted on this hydro-grip spindle.
- Power of electric motor is as follows:
  - **37 kW** on bottom cutterhead
  - **37 kW** on top cutterhead.

Feed Mechanism – Outfeed Rolls

- Two (2) polished exit rolls, chromed, 10 in. diameter.
- All feed rolls are assembled cantilever for quick access.
- Outfeed rolls are driven by same motorization as planer.

Chromed Plates

- One (1) central adjustable feed plate integrated to frame.
- One (1) exit feed plate.
- All feed plates with interchangeable chromed wear plates.

Alignment Rulers (guide bar)

- One (1) entry ruler, zero line attached to frame, with manual adjustment of alignment and rigid mechanical locks.
- One (1) exit ruler.
- All rulers are chromed.

Foot Pressers (chip breakers)

- Entry foot pressers are assembled on parallelogram systems on rotation point.
- Exit foot pressers.
- All foot pressers are machined and chromed.

Lateral Presser Roll

- Lateral presser roll manufactured from solid steel with adjustment on pacific bearings and release on pneumatic cylinder.
- Lumber is always pressed against the guide bar, therefore does not rebound.

Hydraulics Locks

- Cutterhead is locked automatically with hydraulic locks on a standard basis.

Price for Gilbert profile/splitting module:	**$260,426.00 CAD**

Note: Profile heads, tools and saws are not included.

Automatic axes

All axes can be controlled automatically by the Gilbert Automatic Positioning System. See Gilbert Automatic Positioning System description on next page.

All axes installed on linear bearings for easy adjustments and movements

Top head (profile/splitting head) vertical movement	**$13,715.00 CAD**
Bottom head (profile/splitting head) vertical movement	**$13,715.00 CAD**
Top head (profile/splitting head) horizontal movement	**$13,715.00 CAD**
Bottom head (profile/splitting head) horizontal movement	**$13,715.00 CAD**
Complete frame horizontal movement	**$13,715.00 CAD**

GILBERT AUTOMATIC POSITIONING SYSTEM FOR PLANER

Note: Picture may be different from description

A positioning system is a computer system which is attached to the planer by installing electric servo-motors onto each axis attached to the cutter heads. To increase accuracy, the encoders on the servo-motors operate in closed loop.

Description

- Motorization is located on the opposite side of the manual displacement.
- **Five (5) axis system**: top & bottom head, side heads, bedplate (possibility of more)
- Quick release system and immediate return to production after wood jamming.
- System allows both side heads to be moved simultaneously 0.05 of a millimeter on either side to eliminate omission (skips).
- System permits to predetermine all manufactured products.
- Changes in production are possible very quickly (eg: 50x 75 to 50x100).
- Constant precision of manufactured products (only the first piece needs to be measured).
- Rapid automatic adjustment of cutter heads following sharpening of knives.
- **Automatic height adjustment for different thicknesses – INCLUDED with this model of planer**

Included

- Ewon Cosy 131 Industrial VPN Gateway designed to offer easy remote access across the Internet*

Price for Gilbert 5 axis automatic positioning system:**	**$140,040.00 CAD**

*Customer must provide internet access

Independent module for top head

Actual situation

The top head is linked with the four (4) top rolls (Two (2) infeed rolls, one (1) center roll and one (1) outfeed roll.)

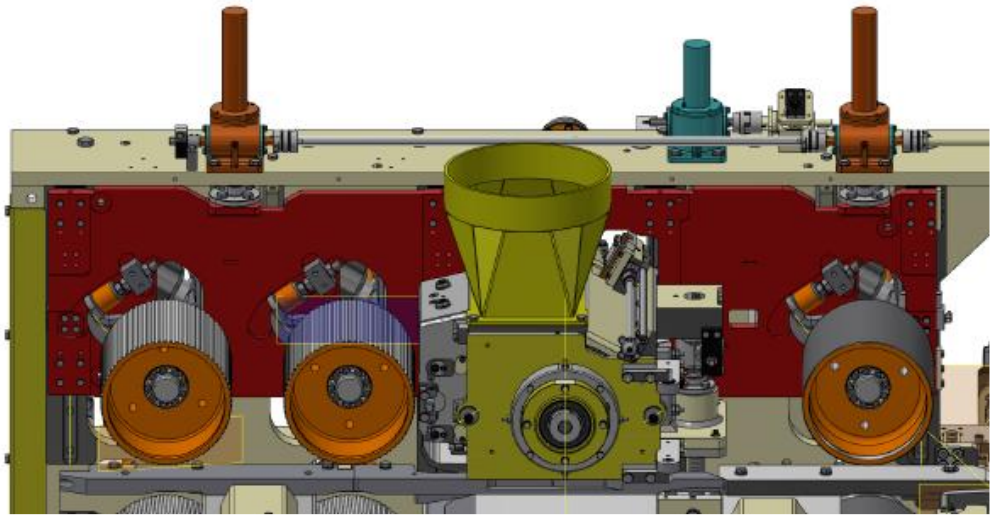

Option

We can add an independent module for the top head; this module is mounted on linear bearings and servo motor. With this independent module the operator will be able to adjust the top cutter head position without having to readjust the four (4) upper rollers.

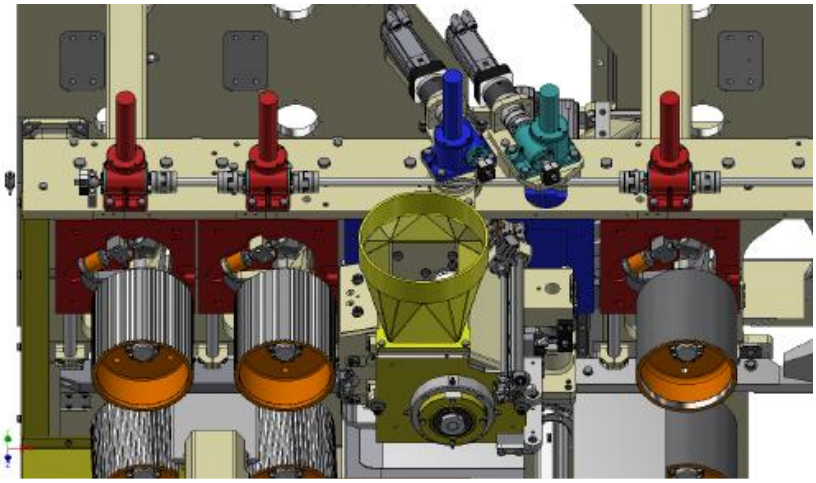

Price for independent module for top head (1 axis):	**Included in Plus options**

Option: Automatic Top Head Pressure Plate

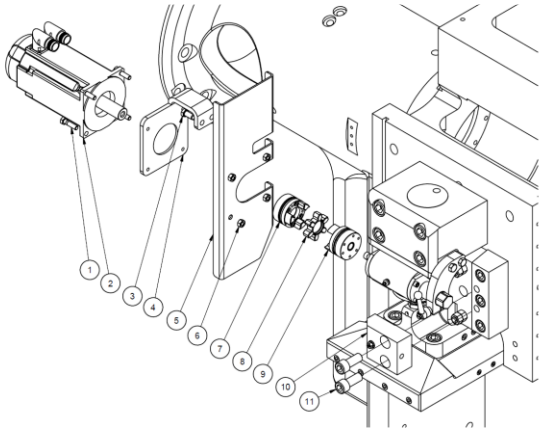

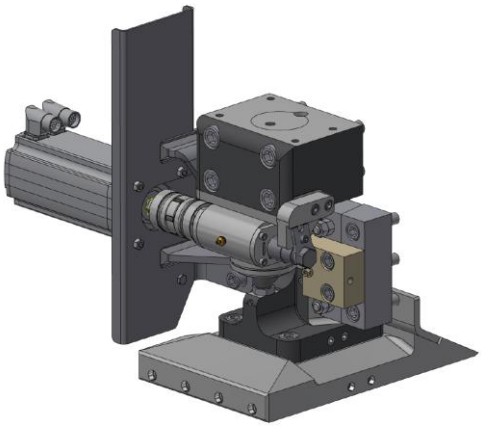

Description:

- Servo-motor for perfect precision.
- Safer and increases efficiency.
- Controlled by the Gilbert Automatic Positioning System.

Price for automatic top head pressure plate:	**$13,715.00 CAD**

Option: Automatic Width Adjustment

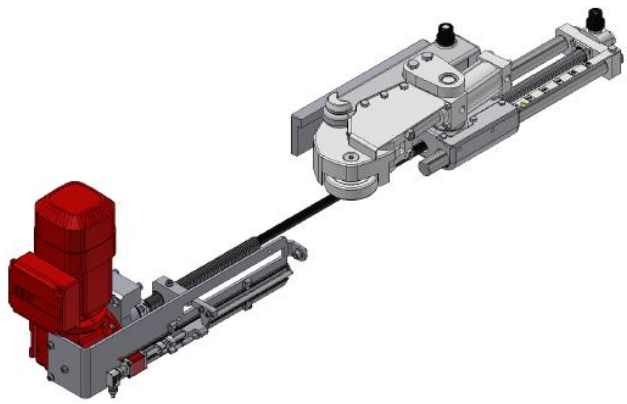

Description:

The automatic holdover roll to change from one width to another automatically, for example 2x4 to 2x6. To make this movement automatically, a servo motor is connected to the Gilbert controller.

Price for one (1) automatic width adjustment system:	**$13,715.00 CAD**

Option: Semi-Automatic Top and Bottom Head Jointers

Description:

- Safer
- Better quality lumber
- Easy to use
- Can be used in automatic or manual mode

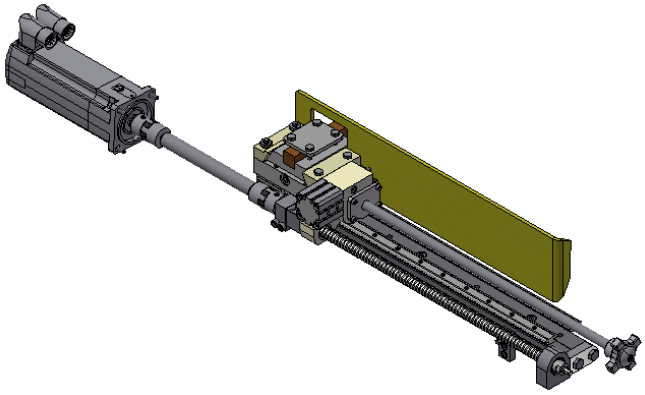

Price for one (1) semi-automatic top/bottom head jointer:	**$14,316.00 CAD**

Option: Automatic Side Head Jointers

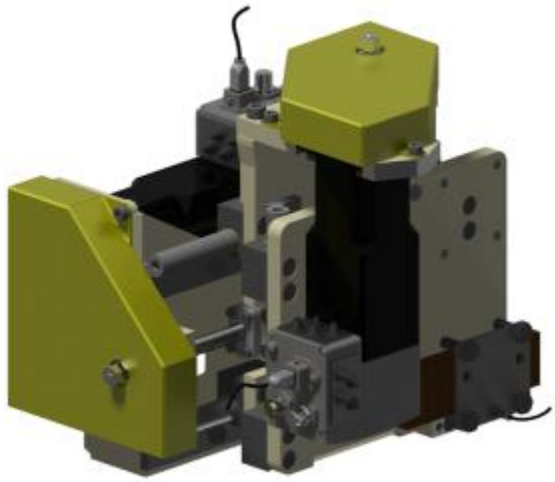

Description:

- Much safer for operator.
- Knives are jointed with uniformity and with greater accuracy.
- Very precise set up.
- Keep perfect radius all the time.
- Reduced grinding time.
- Noticeably increased knife lifetime.
- Increase the quality of the finished wood.
- Very rapid payback on knives!!
- Grindstone not included.

Price for one (1) 1 axis model automatic side head jointer:	**$13,781.00 CAD**

Otion: Ipad Control

Description:

- The operator can use the IPAD next to the planer to make adjustments. Or on the landing deck to correct skips. Or to open heads from the tilt hoist!
- The application for the Ipad included Vijeo Designer Air and the WIFI access point is located inside the panel.
- You also need an IPAD and heavy-duty protective cover (not included).

Price for ipad control:	**$520.00 CAD**

GILBERT FEED TABLE

Note: Picture may be different from description

Description

- **Designed** for lumber up to 6 m length
- Feeding speed up to 400 meters per minute.
- Two (2) infeed pineapple rolls, activated by pneumatic cylinders.
- Two (2) spiralled infeed bed rolls.
- Three (3) bottom rolls on feed table.
- **One meter** bridge section with one top and bottom roll.
- **One (1) 45 kW electric motor** drives the infeed table and bridge.
- Steel frame with slots for saw dust disposal.

Price for Gilbert feed table and bridge:	**$297,752.00 CAD**

PLANER OPTIONS

Head removal hoist	$8 360,00	CAD
Knife realignment jig for top and bottom heads	$21 223,13	CAD
Holder to set up knives on the side heads	$6 192,74	CAD
Special tool kit	$10 989,72	CAD
High pressure centralized lubrication	Included	
High pressure automatic lubrication Included with S-Series Plus	$15 012,74	CAD
Water integrated cooling system (guide bars) *Included with S-Series Plus*		

Knife realignment jig for top and bottom heads

Note: Picture may be different from description

Description:

- Jig to set knives in top and bottom cutterheads
- No bolts, knives are held in place with hydro-grip pressure
- Better traction to insert knives
- Better cutting circle
- No use of the hammer, Safer
- Faster

Price for knife realignment jig for top and bottom heads: $21,223.13 CAD

SPECIAL NOTES

Weg motors are used for the planer line in this quotation, if customer has preference for any other brand, we will evaluate the difference in cost and adjust the proposal accordingly.

All Gilbert equipment is painted with Gilbert colors (polyurethane paint)

VFD REQUIREMENTS – SEE ANNEX

Motor List			
Position	**Qty**	**Description**	**Customer must purchase**
For the planer			
Top cutterhead	1	75 kW, 3000 RPM	VFD
Bottom cutterhead	1	75 kW, 3000 RPM	VFD
Right side head	1	37kW, 3000 RPM	VFD
Left side head	1	37 kW, 3000 RPM	VFD
Top saw (Splitting)	1	37 kW,3000 RPM	VFD
Bottom saw (Splitting)	1	37 kW,3000 RPM	VFD
Planer rolls	2	30 kW, 1500 RPM	VFD
Feed table	1	45 kW, 1500 RPM	VFD

ELECTRICAL SYSTEM

There is no hydraulic system; it is fully-functional with electrical device. It is environmentally friendly and it reduces maintenance and operation costs.

QUOTATION FOR GILBERT S SERIES PLANER PROJECT QV02242		
Description	**Quantity**	**Price**
Gilbert S-Series	1	$571 144,00
Option for S-Series Plus Planer	1	$57 061,00
2 Bigger motors for top and bottom Heads 75 kW	1	$20 120,00
2 Bigger side head motors Heads 37 kW	1	$14 705,00
Splitting Module	1	$260 426,00
Automatic axes for splitting module	5	$68 575,00
Gilbert Automatic Positioning System	1	$140 040,00
Option for setworks: Independent module for top head (1 axis)	1	Included with Plus Option
Option for setworks: Automatic top head pressure plate	1	$13 715,00
Option for setworks: Automatic width adjustment	2	$27 430,00
Option for setworks: Automatic top/bottom head jointer	2	$28 632,00
Option for setworks: Automatic side head jointer	2	$27 562,00
Option for setworks: Ipad control	1	$520,00
Gilbert feed table	1	$297 752,00
Other Options		
Head removal hoist	2	$16 720,00
Knife realignment jig for top/bottom heads	1	$21 223,13
Holder to set up the knives on the side heads	1	$6 192,74
Special tool kit	1	$10 989,72
High pressure centralized lubrication		Included
High pressure automatic lubrication	1	Included with Plus Option
Total ($CAD)		**$1 582 807,59**

Terms:

Upon receiving purchase order	30%
90 days after receiving purchase order	20%
180 days after receiving purchase order	15%
Ready to deliver	15%
At the start-up date (not exceeding 30 days after delivery)	10%
Acceptance performance test (not exceeding 30 days after start-up)	10%

Not included:

- Delivery and Custom fees
- Cutterheads
- Spare Parts
- Substructure
- Mechanical and Electrical installation

Delivery Time:
On site September 2026

Warranty:
All GILBERT products are covered by a one year warranty against all manufacturing defects.

Validity:
This quotation is valid of a period of thirty (30) days.

We hope that this proposal is of interest to you and that we will be working together in the near future on your project. Please feel free to contact us if you have any questions or concerns.

Sincerely yours,

Heidi Danbrook	Roger Timms
Sales Manager Gilbert Products	Managing Director Acora

Performance tests

Gilbert guarantees 95% running uptime with the Gilbert Planer

Tolerance
Tolerances for aligning and leveling the planer will be better than:

a) Elevation: +/- 0.13 mm
b) Horizontal: +/- 0.13 mm

Performance specifications
75 KW TEFC on top cutter head
75 KW TEFC on bottom cutter head
37 KW TEFC on right side head
37 KW TEFC on left side head

See excel table in quotation with speeds

Performance tests
Maximum thickness standard deviation +/- 0.13 mm
Maximum width standard deviation of +/- 0.13 mm
Provide adequate finish on lumber.

Ten sample pieces will be chosen by customer for the acceptance tests on the quality of the finished product.

Product acceptance
Performance tests are to be conducted by Gilbert and customer personnel as soon as equipment is ready for performance testing. Test results, together with notification as to whether or not the equipment is accepted, will be given in writing.
All acceptance testing must strictly conform to established Gilbert procedures.
Deviation tests are intended to measure the above machine only, not fiber damage from external sources.
Productivity:

a) Three batches of each dimension to be run
b) This test is to start with boards at the planer infeed.
c) Planer to be run at specified speed continuous for ten minutes for each test
d) The average feed speed for the three tests (for each size) combined must meet or exceed the feed speed specifications.
e) Adjustments will be made and test rerun if not passed.
f) There are to be no customer operator caused delays.
g) Excessive bow (100 mm horns down) and crooked (50 mm) boards will be removed from the test.

Size deviation:

a) A one hundred (100) board sample will be taken.
b) Each board is to be measured using at 4 points per side.
c) The total standard deviation for all the boards combined must meet or exceed the specification.
d) Newly fitted knives will be installed for this test.

Quality

Gilbert guarantees to reach the best quality for each product.